32QX Steam Resonator

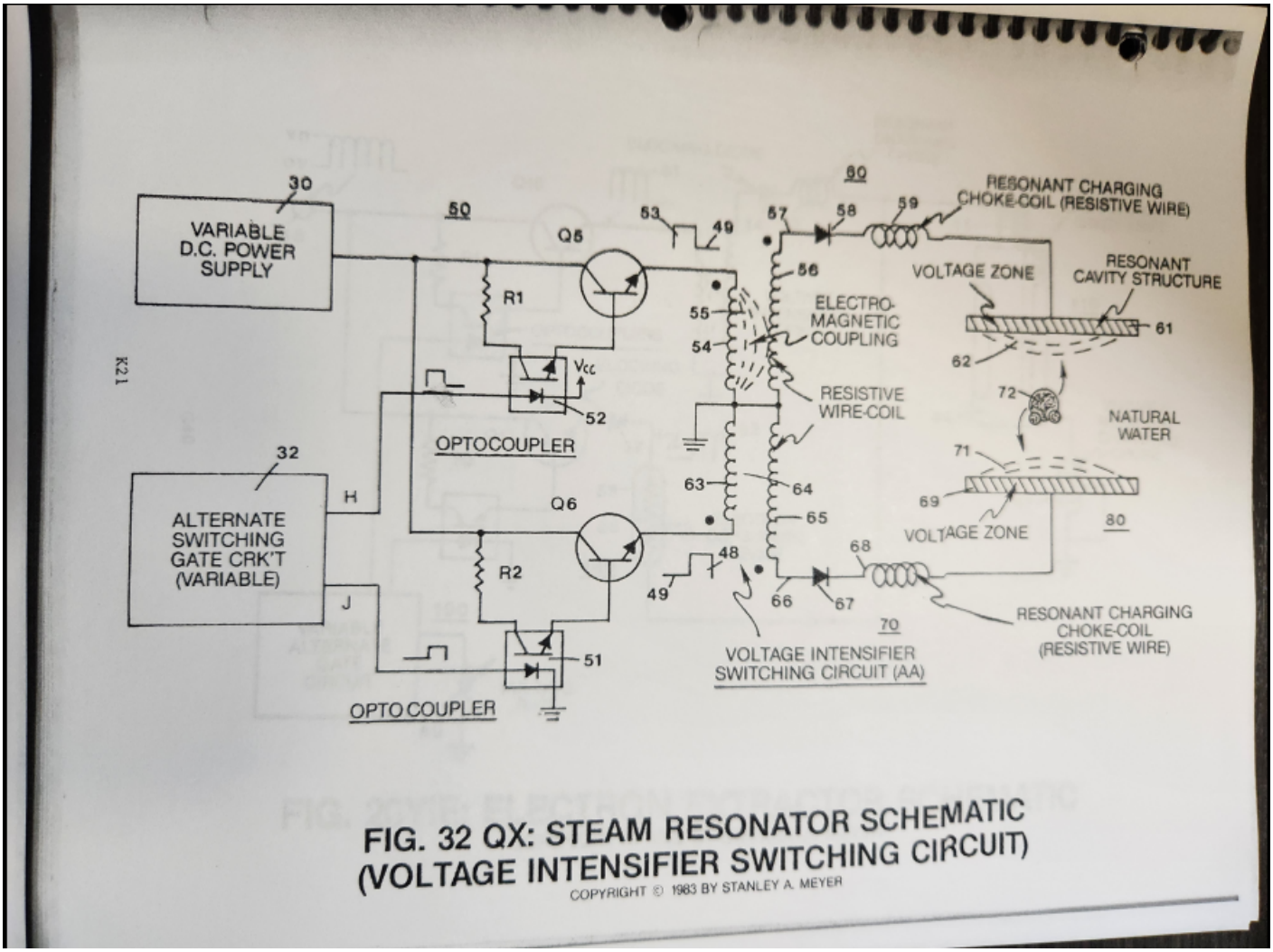

FIG. 32 QX: STEAM RESONATOR SCHEMATIC (VOLTAGE INTENSIFIER SWITCHING CIRCUIT)

COPYRIGHT © 1983 BY STANLEY A. MEYER

Revision #2
Created 18 May 2024 00:25:13 by Ethan Crowder
Updated 21 October 2024 23:18:29 by Chris Bake