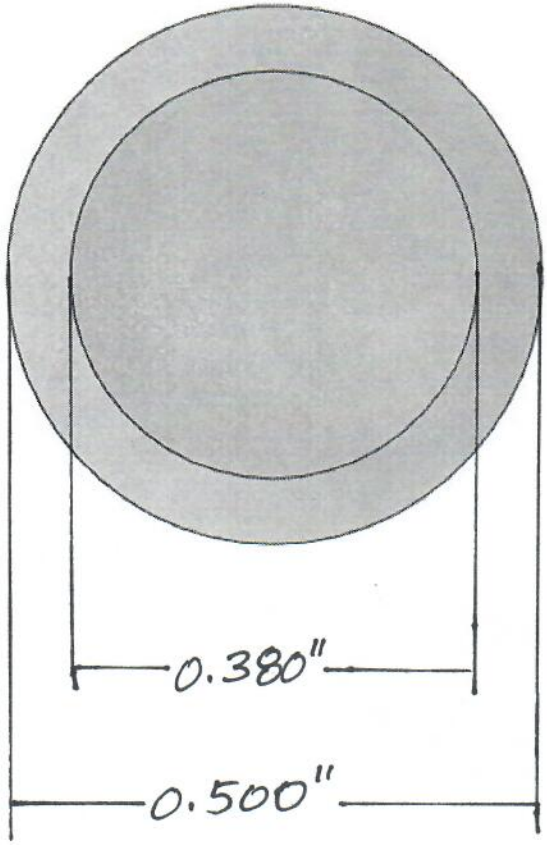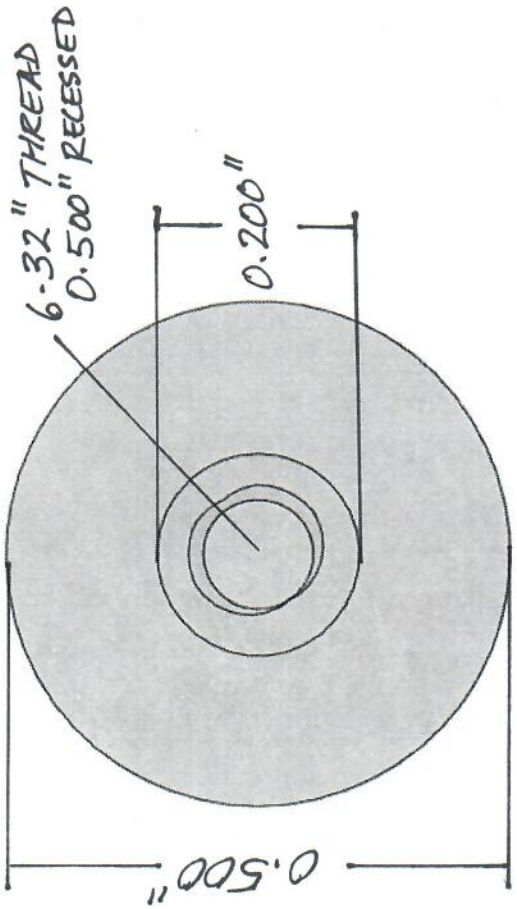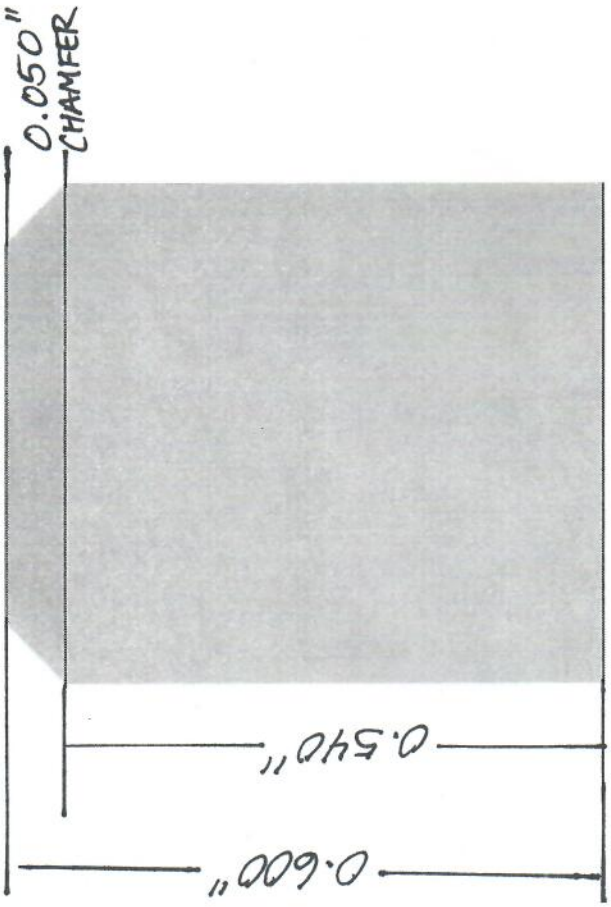STEAM RESONATOR - DELRIN NUT 5-17-23